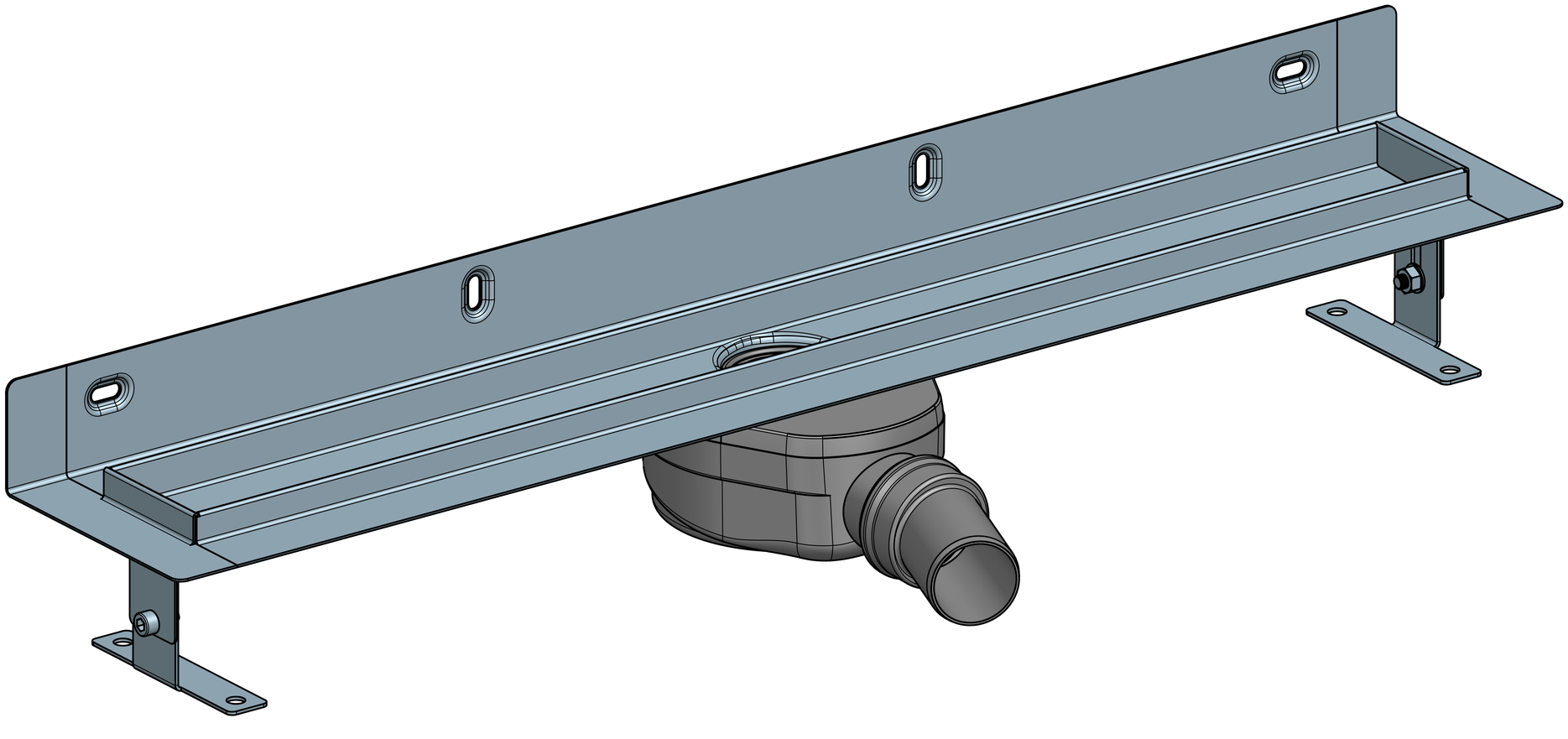

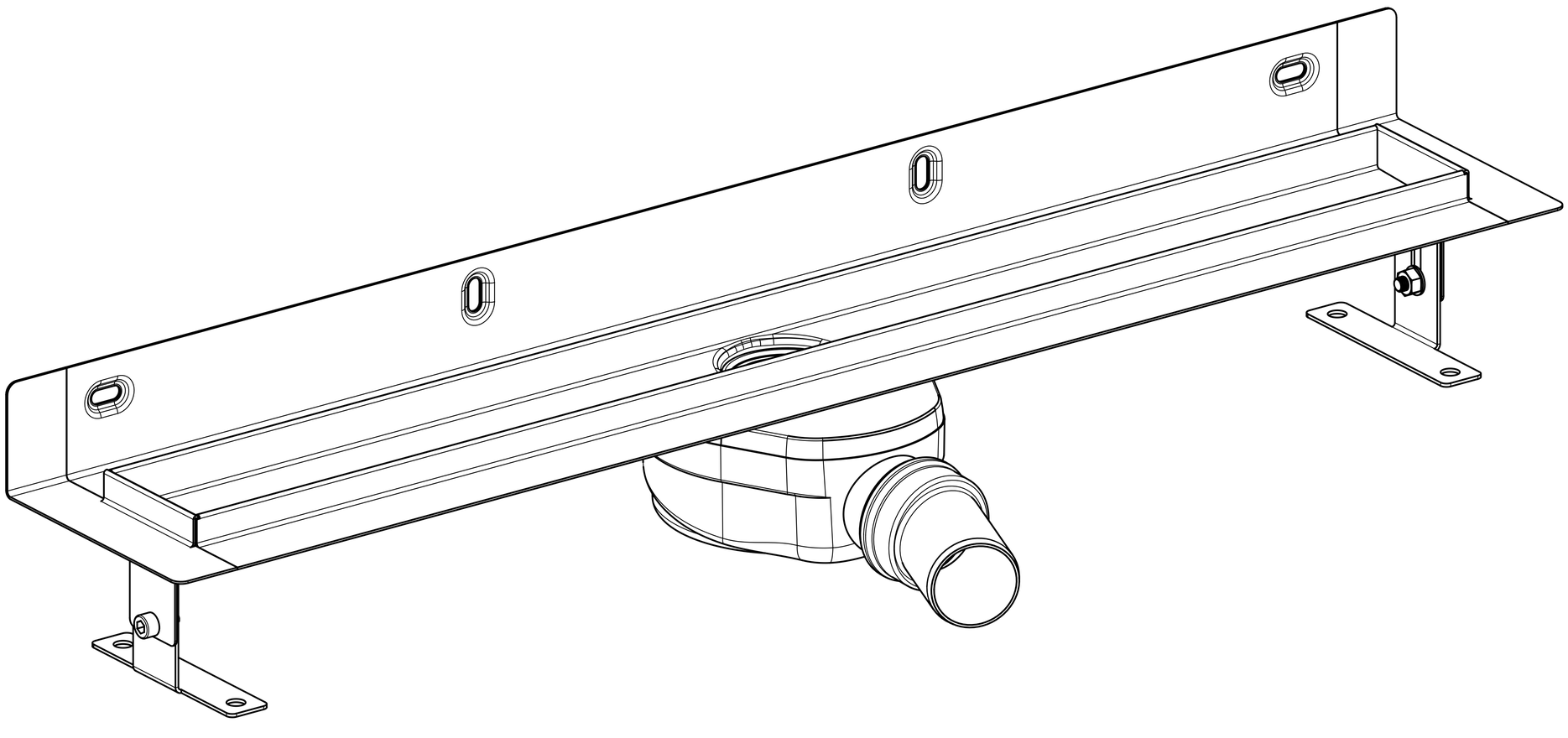

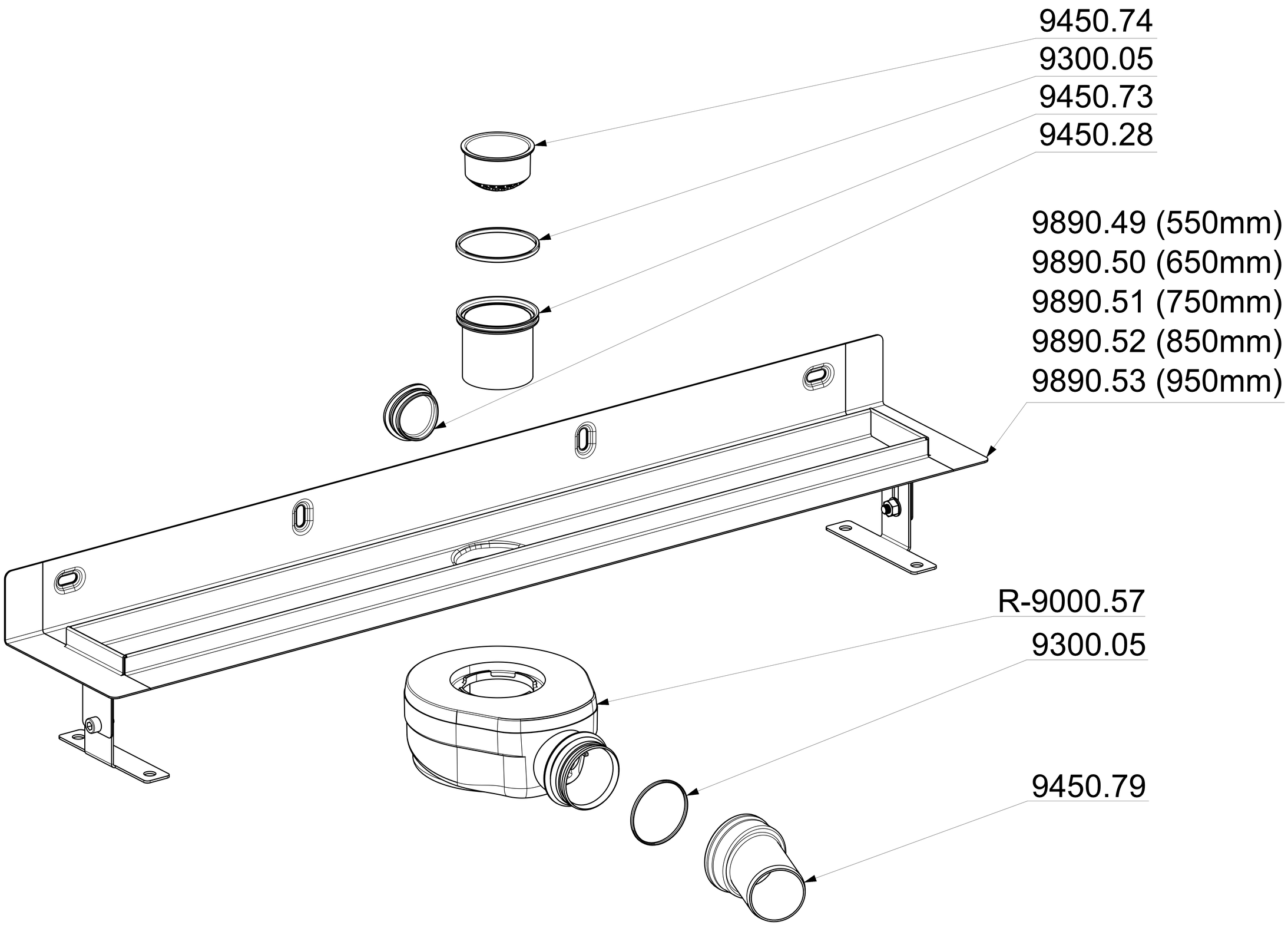
9450.74
9300.05
9450.73
9450.28
9890.49 (550mm)
9890.50 (650mm)
9890.51 (750mm)
9890.52 (850mm)
9890.53 (950mm)
R-9000.57
9300.05
9450.79

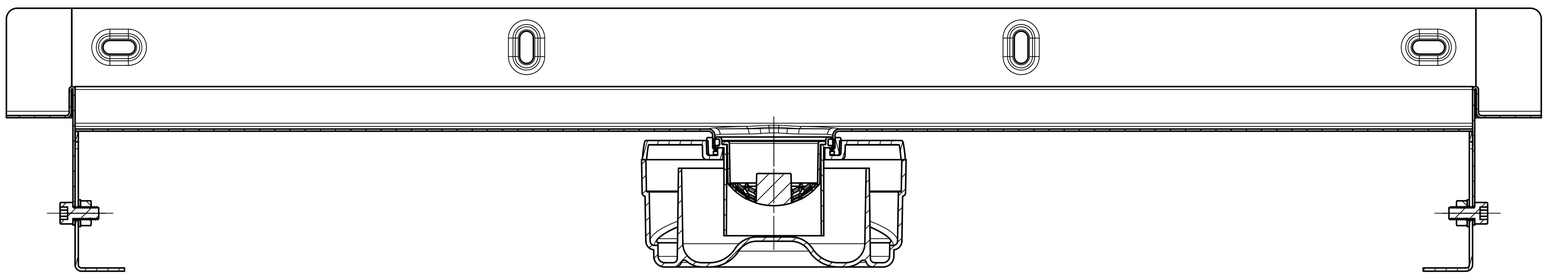

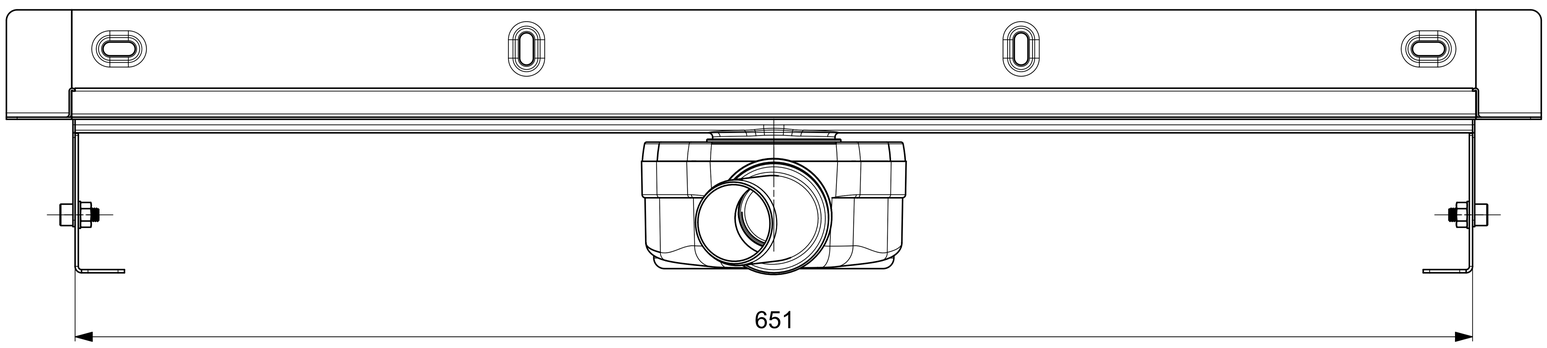
651

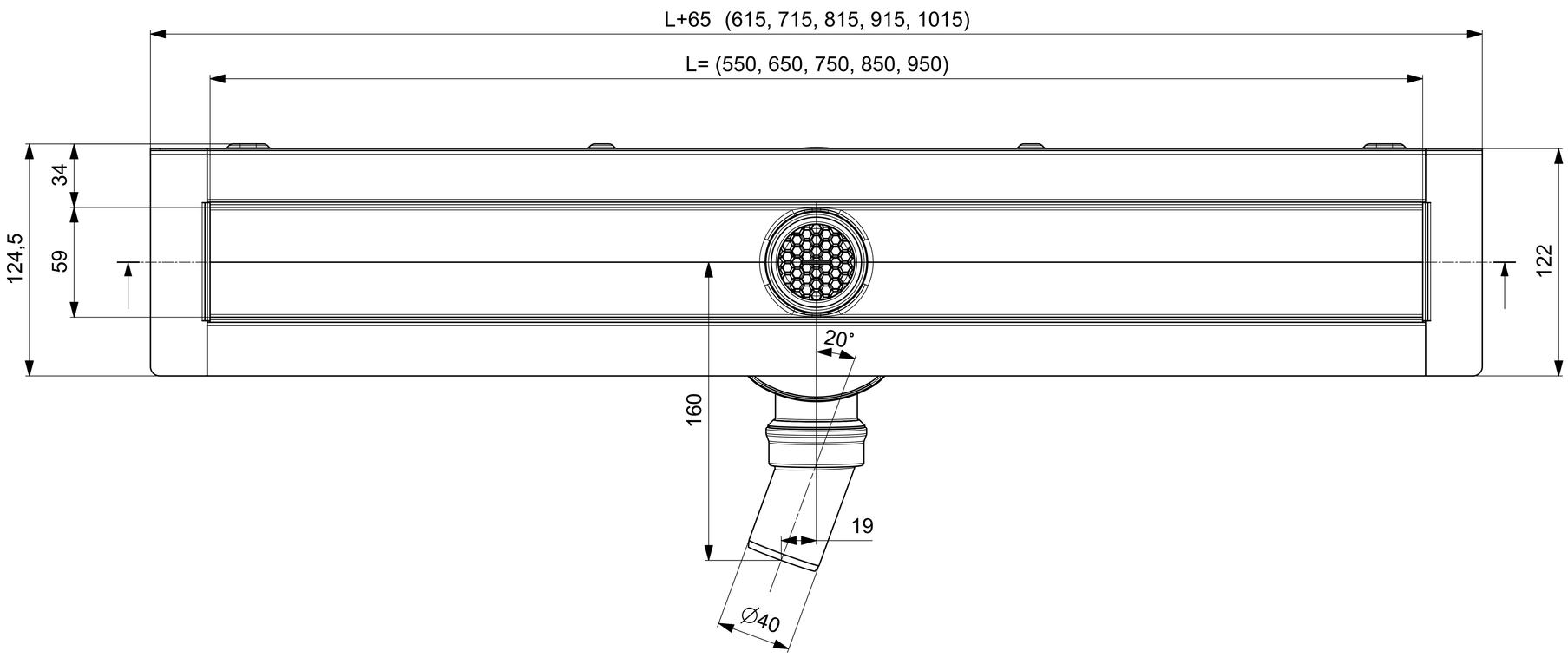
L+65 (615, 715, 815, 915, 1015)
L= (550, 650, 750, 850, 950)
124,5
34
59
122
160
20°
19
Ø40

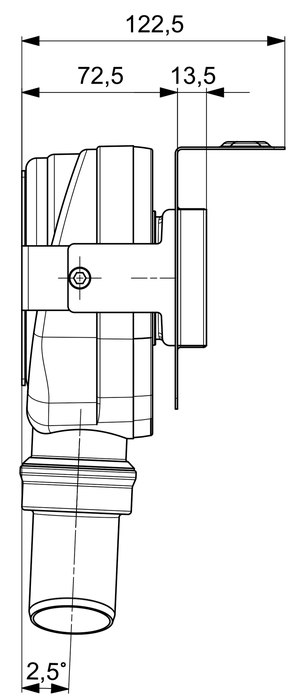
122,5
72,5
13,5
2,5°

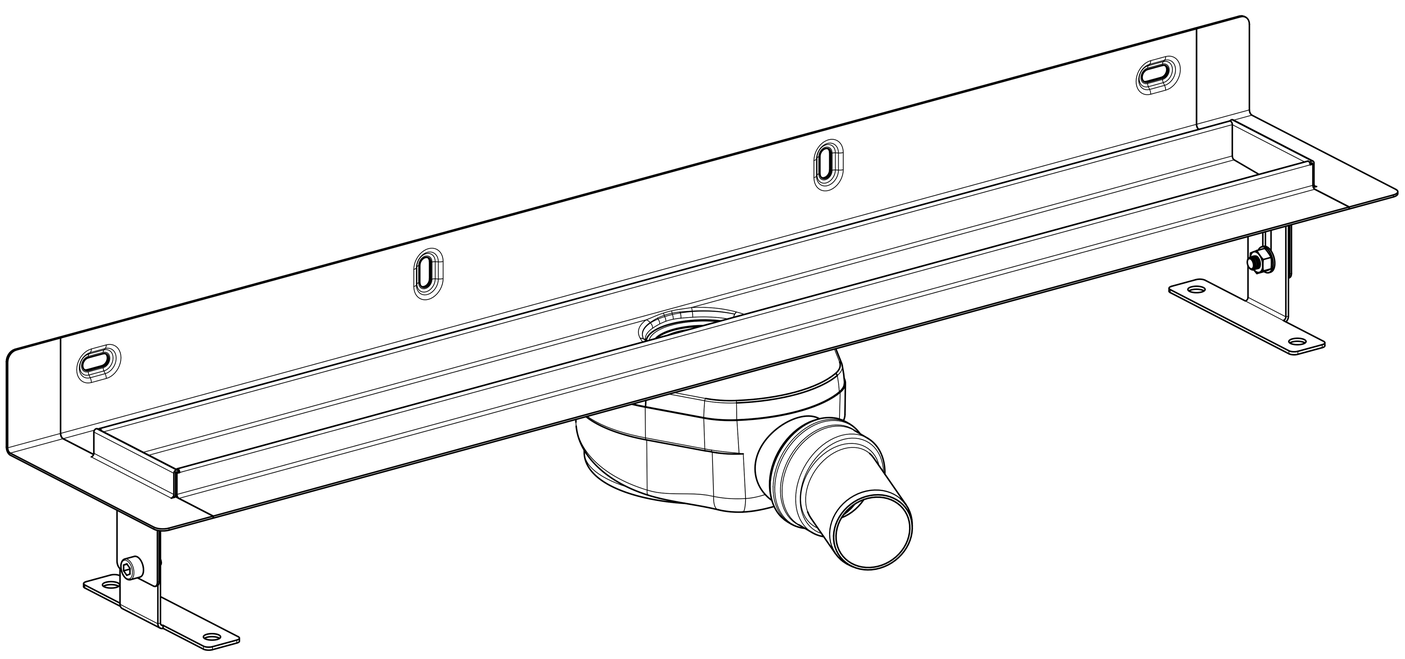

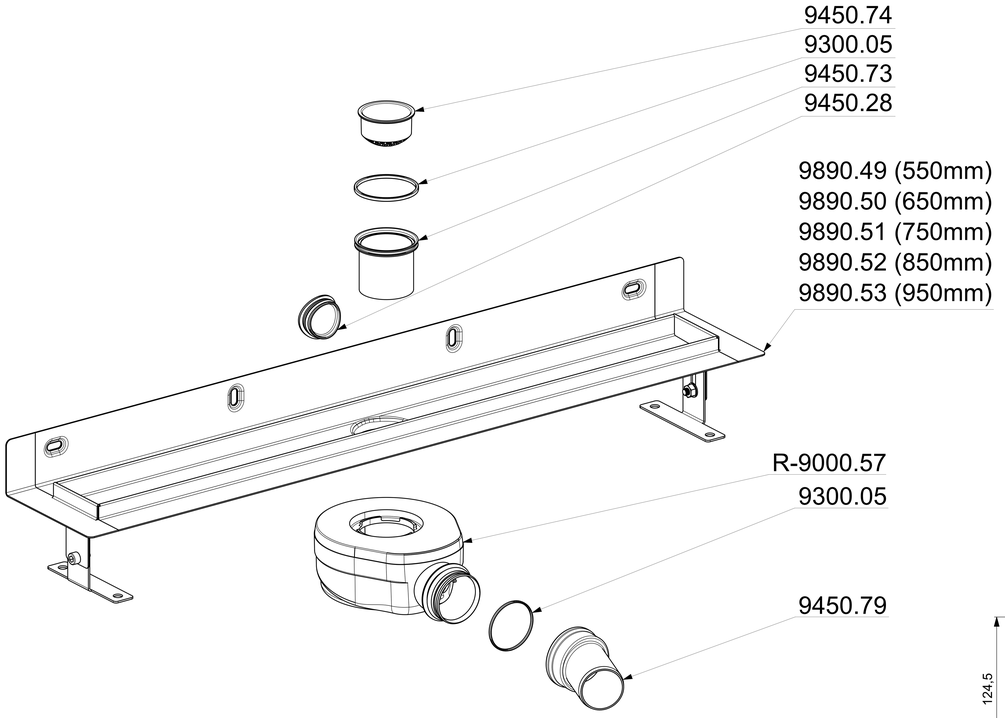
9450.74
9300.05
9450.73
9450.28
9890.49 (550mm)
9890.50 (650mm)
9890.51 (750mm)
9890.52 (850mm)
9890.53 (950mm)
R-9000.57
9300.05
9450.79

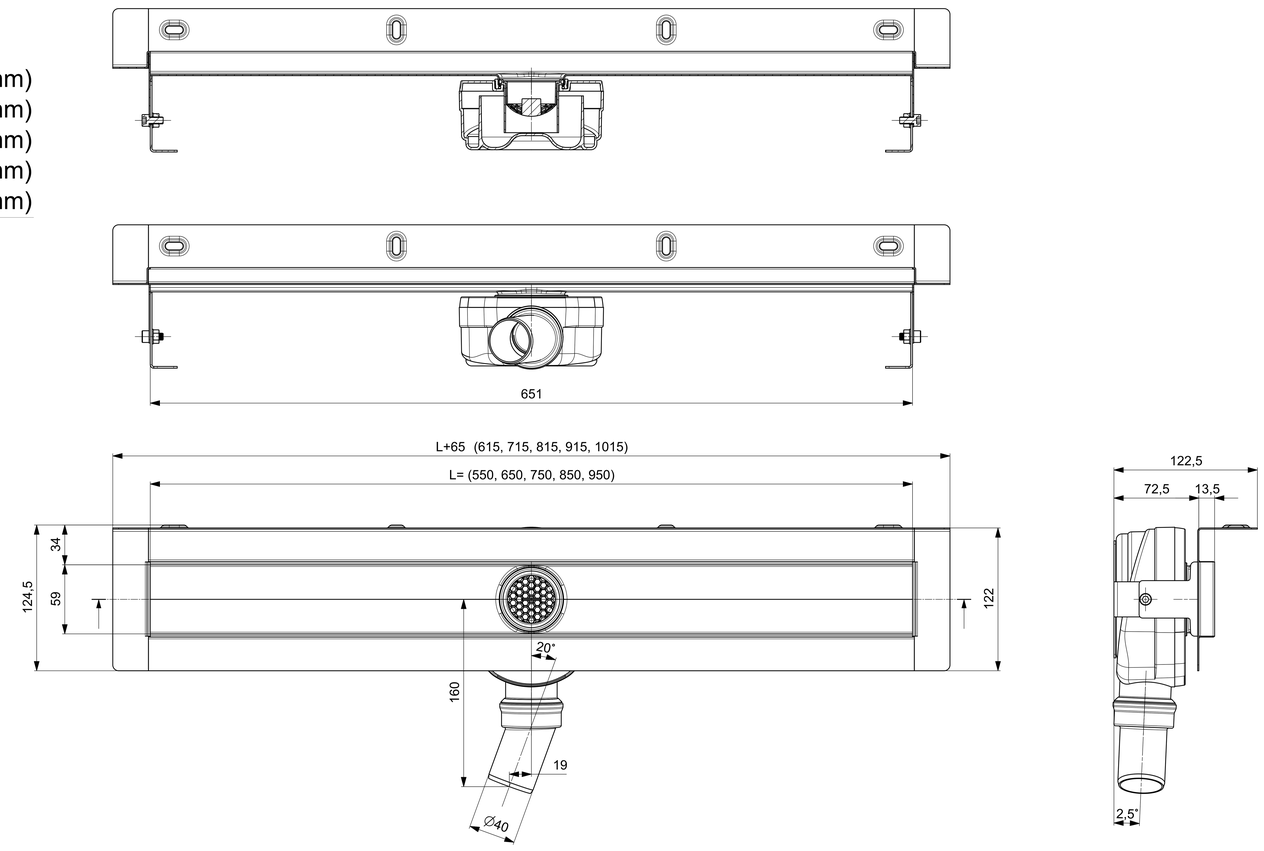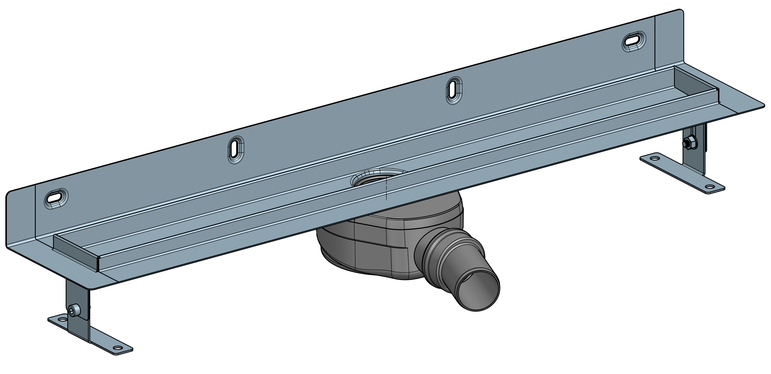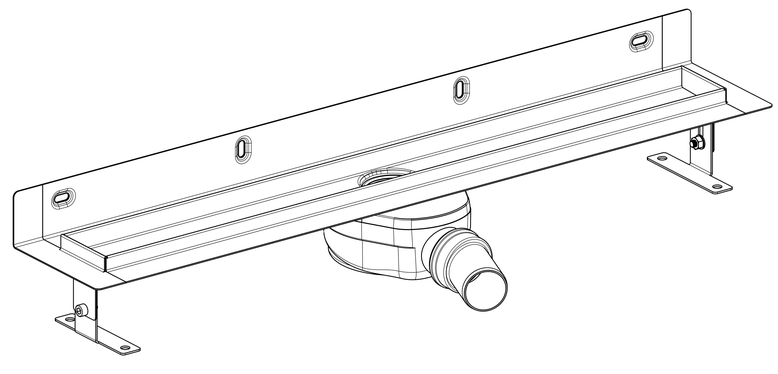
651
L+65 (615, 715, 815, 915, 1015)
L= (550, 650, 750, 850, 950)
124,5
34
59
122
20°
160
19
Ø40
122,5
72,5
13,5
2,5°